EXPLODED DRAWING—Model No. GZFW2054.3

R0607A

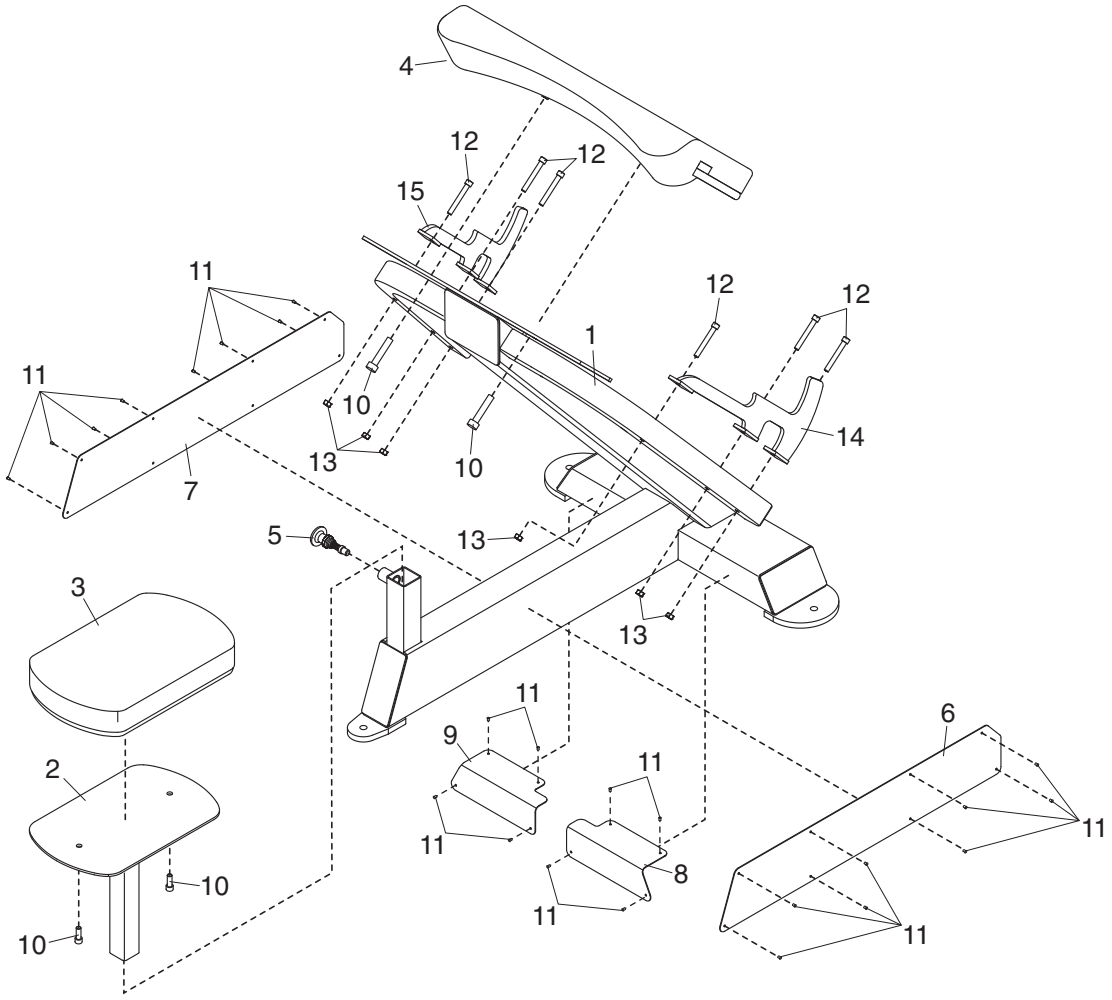

Bubble #	OEM Number	Description
1	GZ4388	FRAME
2	GZ2319	SEAT FRAME
3	GZ5108-11	SEAT
5	GZ1501	SEAT KNOB
10	GZ1501	PIN,POP,STND,W/SPRNG
11	GZ1021-01	1/8" X 3/16" RIVET
12	GZ1013-13	SCREW,SHCS,ZP,3/8-16X2.75
13	133945	NUT,HX,NYL,JAM,TZP,3/8-16
16	GZ1074	WASHER, 5/16"